Date: Monday, 02/06/2008 4:32:18 PM
User: Julie Lecocq

Process Sheet

Customer	: CU-DAR001 Dart Helicopters Services	**Drawing Name**	: MIRROR BRACKET
Job Number	: 39636A01		
Estimate Number	: 10143		
P.O. Number	:	**Part Number**	: D20135
This Issue	: 02/06/2008 **S.O. No.** :	**Drawing Number**	: D2013 REV C
Prsht Rev.	: NC	**Project Number**	: N/A
First Issue	: / / **Type** : SMALL /MED FAB	**Drawing Revision**	: C
Previous Run	: 36919A	**Material**	:
Written By	:	**Due Date**	: 10/06/2008 **Qty:** 5 **Um:** Each
Checked & Approved By	: JLP 08.6.02		
Comment	: Est Rev:A New Issue 05-11-01 JLM		

Additional Product

Job Number:

Seq. #:	Machine Or Operation:	Description :
1.0	M304TR0750W049	304 RD Tube .750 x .049W

Comment: Qty.: 1.8165 f(s)/Unit Total : 9.0825 f(s)
Material: 3/4 O.D. x .049" wall, 304/316 SS Seamless Tubing
(M304TR0.750W.049)
Batch: M10768 8 SB 08/06/23 (5)

2.0	BRAKE NC	NC BRAKE

Comment: NC BRAKE (5)

1-Punch as per template D2013-T5 and Dwg D2013 SB 08/06/23

2-Flatten ends of D2013-5 tube as per Dwg D2013 using DT8545 ~~08/07/07~~ (5)

3-Bend (1) tube as per Dwg D2013 using Jig DT8201Identify as D2013-5. FF 08-08-01 (5)

4-Deburr as required ~~08/07/07~~ (5)

3.0	QC5	INSPECT WORK TO CURRENT STEP

Comment: INSPECT WORK TO CURRENT STEP 08/08/08 (5)

4.0	PACKAGING 1	PACKAGING RESOURCE #1

Comment: PACKAGING RESOURCE #1 CARL 8/8/08 (5)

Dart Aerospace Ltd

W/O:		WORK ORDER CHANGES					
DATE	**STEP**	**PROCEDURE CHANGE**	**By**	**Date**	**Qty**	**Approval** Chief Eng / Prod Mgr	**Approval** QC Inspector

Part No: _____ **PAR #:** _____ **Fault Category:** _____ **NCR:** Yes No **DQA:** _____ **Date:** _____

QA: N/C Closed: _____ **Date:** _____

NCR:		WORK ORDER NON-CONFORMANCE (NCR)						
DATE	**STEP**	**Description of NC** Section A	**Corrective Action** Section B			**Verification** Section C	**Approval** Chief Eng	**Approval** QC Inspector
			Initial Chief Eng	**Action Description** Chief Eng	**Sign & Date**			

NOTE: Date & initial all entries

Date: Monday, 02/06/2008 4:32:18 PM
User: Julie Lecocq

Process Sheet

Customer: CU-DAR001 Dart Helicopters Services **Drawing Name:** MIRROR BRACKET

Job Number: 39636A01 **Part Number:** D20135

Job Number:

Seq. #:	Machine Or Operation:	Description :
5.0	QC21	FINAL INSPECTION/W/O RELEASE

(5)

Comment: FINAL INSPECTION/W/O RELEASE

AD 08/05/08

Job Completion

UMF 08-08-05

Form: rprocess

Dart Aerospace Ltd

W/O:		WORK ORDER CHANGES					
DATE	**STEP**	**PROCEDURE CHANGE**	**By**	**Date**	**Qty**	**Approval** Chief Eng / Prod Mgr	**Approval** QC Inspector

Part No: _____ **PAR #:** _____ **Fault Category:** _____ **NCR:** Yes No **DQA:** _____ **Date:** _____

QA: N/C Closed: _____ **Date:** _____

NCR:		WORK ORDER NON-CONFORMANCE (NCR)						
DATE	**STEP**	**Description of NC** Section A	**Corrective Action** Section B			**Verification** Section C	**Approval** Chief Eng	**Approval** QC Inspector
			Initial Chief Eng	**Action Description** Chief Eng	**Sign & Date**			

NOTE: Date & initial all entries

DESIGN	DRAWN BY	DART AEROSPACE LTD HAWKESBURY, ONTARIO, CANADA
JB.	RF	
CHECKED	APPROVED	DRAWING NO. REV. C
KE		D2013 SHEET 1 OF 3
DATE		TITLE SCALE
99.06.07		MIRROR BRACKET NTS

A	90.10.22	NEW ISSUE
B	94.06.15	REDRAWN
C	99.06.07	REDRAWN, CHANGE OF DIMENSIONS

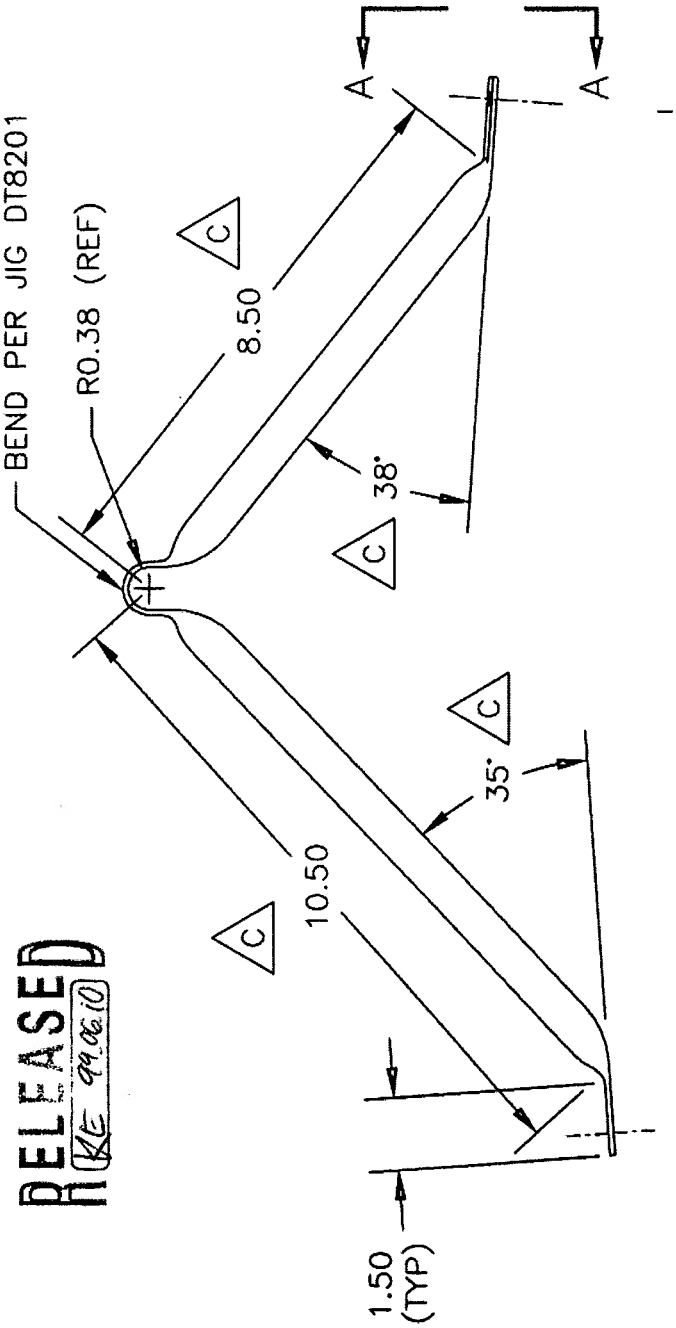

D2013-1 LH SHOWN
D2013-2 RH OPPOSITE
(FOR 205 MIRROR)

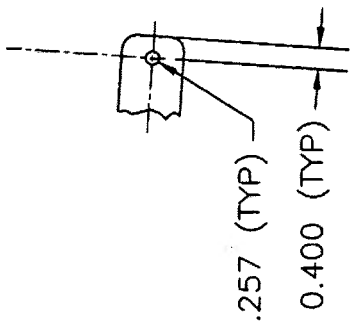

CUT LENGTH: 23.25 INCHES

MATERIAL: AISI 304/316 SS SEAMLESS TUBE,
0.750 OD x 0.049 WALL

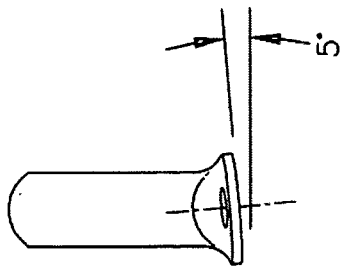

VIEW A-A

RELEASED
KE 99.06.10

SHOP COPY
RETURN TO
ENGINEERING
UNCONTROLLED COPY
SUBJECT TO AMENDMENT
WITHOUT NOTICE

WORK ORDER
NO. 326364

Copyright 1990 by DART AEROSPACE LTD

RELEASED
RE 99.06.10

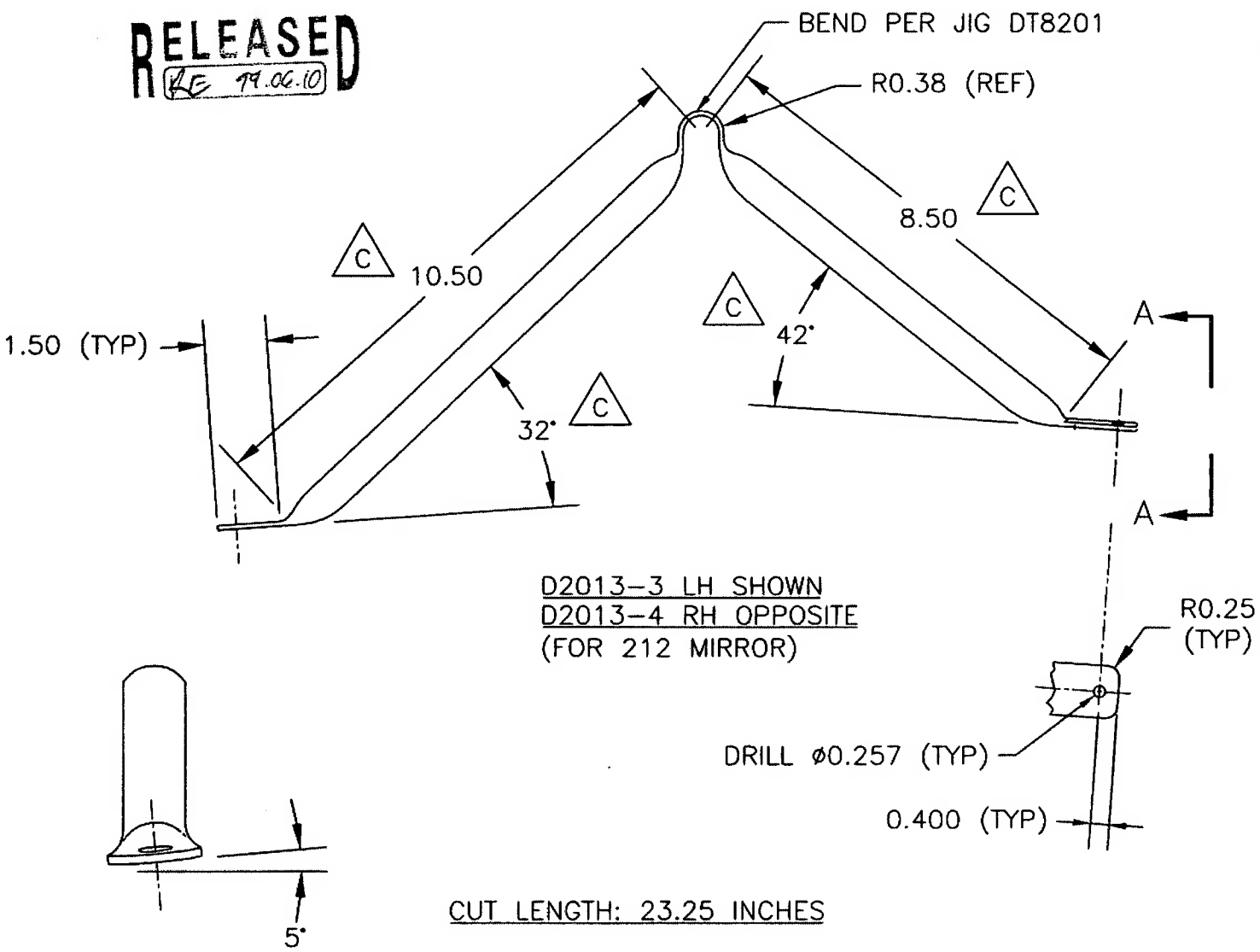

D2013-3 LH SHOWN
D2013-4 RH OPPOSITE
(FOR 212 MIRROR)

VIEW A-A

CUT LENGTH: 23.25 INCHES

MATERIAL: AISI 304/316 SS SEAMLESS TUBE,
0.750 O.D. x 0.049 WALL

DART

QA COPY ISSUED

DESIGN	DRAWN BY	DART AEROSPACE LTD HAWKESBURY, ONTARIO, CANADA	
JB	RF		
CHECKED	APPROVED	DRAWING NO.	REV. C
KE		D2013	SHEET 2 OF 3
DATE		TITLE	SCALE
99.06.07		MIRROR BRACKET	NTS

Copyright 1990 by DART AEROSPACE LTD

SHOP COPY
RETURN TO
ENGINEERING
UNCONTROLLED COPY
SUBJECT TO AMENDMENT
WITHOUT NOTICE
WORK ORDER
NO. 316361

RELEASED KE 99.06.10

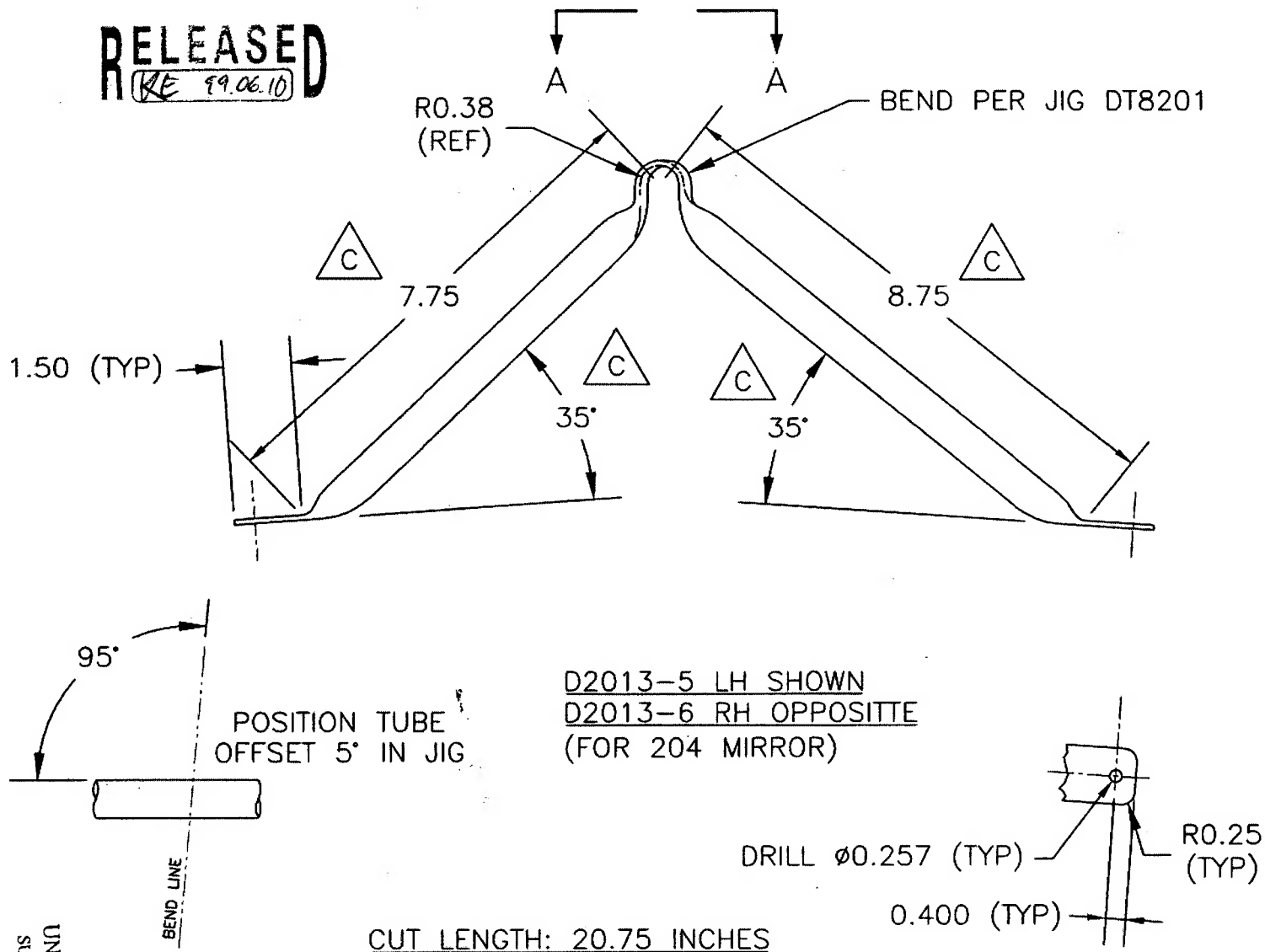

D2013–5 LH SHOWN
D2013–6 RH OPPOSITTE
(FOR 204 MIRROR)

CUT LENGTH: 20.75 INCHES

MATERIAL: AISI 304/316 SS SEAMLESS TUBE,
0.750 O.D. x 0.049 WALL

DART

QA COPY ISSUED

DESIGN JB	DRAWN BY RF	DART AEROSPACE LTD HAWKESBURY, ONTARIO, CANADA
CHECKED KE	APPROVED	DRAWING NO. D2013 — REV. C — SHEET 3 OF 3
DATE 99.06.07		TITLE MIRROR BRACKET — SCALE NTS

SHOP COPY
RETURN TO
ENGINEERING
UNCONTROLLED COPY
SUBJECT TO AMENDMENT
WITHOUT NOTICE
WORK ORDER
NO. 39636401

Copyright 1990 by DART AEROSPACE LTD